33 35 015 Replacing Paralever link

+ 33 35 520

Preparatory work

Removing brake-hose cover

Core activity

(-) Removing Paralever link

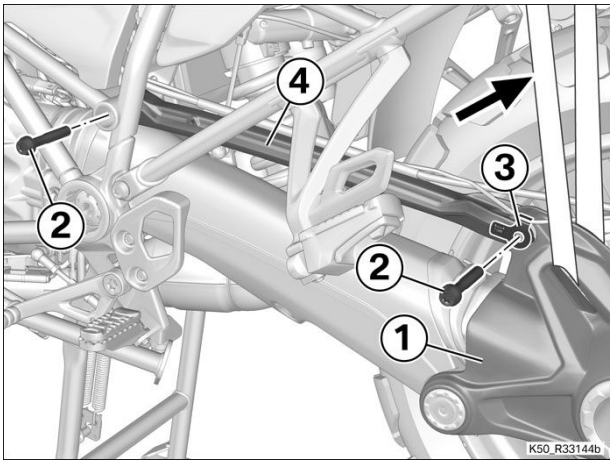

- Secure bevel gears (1) with a strap (arrow) so that the unit cannot drop out of position.
- Remove screws (2).
- Disengage cable guide (3).
- Remove Paralever link (4).

(-) Installing Paralever link

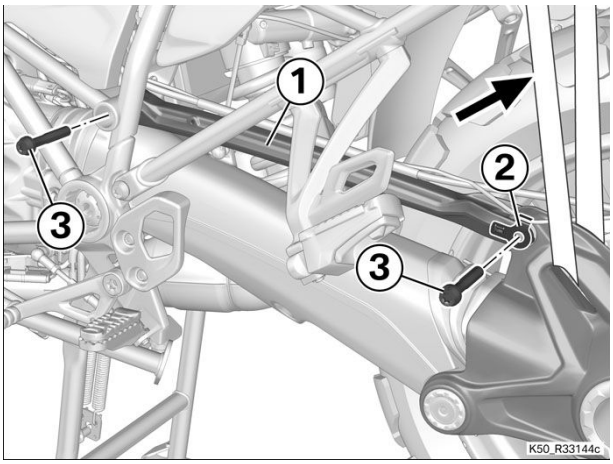

- Clean the threads.
- Install Paralever link (1).
- Work cable guide (2) into position.
- Install screws (3).

Tightening torques		
Paralever link to frame/bevel gears		
M10 x 60 - 10.9, Replace screws Thread-locking compound (Micro -encapsulated)	56 Nm	

- Remove the strap (arrow).

Follow-up work

Installing brake hose cover

Final check of work performed